BRITISH STANDARD

BS EN ISO 9445:2006

Continuously cold-rolled stainless steel narrow strip, wide strip, plate/sheet and cut lengths — Tolerances on dimensions and form

The European Standard EN ISO 9445:2006 has the status of a British Standard

ICS 77.140.20; 77.140.50

Printed by ILI Official BSI Distributor – Index House Ascot SL5 7EU UK ☎ +44 (0)1344 636 300

National foreword

This British Standard is the official English language version of EN ISO 9445:2006. It is identical with ISO 9445:2002. It supersedes BS EN 10258:1997 and BS EN 10259:1997.

The UK participation in its preparation was entrusted to Technical Committee ISE/30, Stainless steel, which has the responsibility to:

— aid enquirers to understand the text;

— present to the responsible international/European committee any enquiries on the interpretation, or proposals for change, and keep UK interests informed;

— monitor related international and European developments and promulgate them in the UK.

A list of organizations represented on this committee can be obtained on request to its secretary.

Additional information

The technical content of BS EN ISO 9445 is very similar to that of BS EN 10258:1997 and BS EN 10259:1997. BSI Technical Committee ISE/30 has been actively involved in the development of all three standards. However, it is of the opinion that there are two important disadvantages with the supersession of BS EN 10258:1997 and BS EN 10259:1997 by BS EN ISO 9445:2006, a single document. The committee would like to draw the attention of users to the points listed below:

1. Requirements for products derived from wide cold rolled strip (w 600–2 100 mm) and for products derived from narrow cold rolled strip (w < 600 mm) are both specified in BS EN ISO 9445. The committee is of the opinion that this could lead to confusion for users. In general, narrow cold rolled strip is used because very close tolerances can be made by this method of production, and smaller quantities can be easily produced. The wide strip production method is used for higher quantities, but generally to less demanding tolerances.
2. For wide strip, two alternative thickness tolerance tables are shown in EN ISO 9445:2006 (Tables 2 and 3), which use different measurement methods. One was taken from BS EN 10259:1997. The second method is based upon Japanese practice. The committee considers the two methods to be equally demanding. However, it is of the opinion that the inclusion of both could lead to confusion for users.

Summary of pages

This document comprises a front cover, an inside front cover, page i, a blank page, the EN ISO title page, the EN ISO foreword page, the ISO title page, pages ii to iv, pages 1 to 14, an inside back cover and a back cover.

The BSI copyright notice displayed in this document indicates when the document was last issued.

This British Standard was published under the authority of the Standards Policy and Strategy Committee on 31 August 2006

ISBN 0 580 49034 3

Amendments issued since publication

Amd. No.	Date	Comments

Cross-references

The British Standards which implement international or European publications referred to in this document may be found in the *BSI Catalogue* under the section entitled "International Standards Correspondence Index", or by using the "Search" facility of the *BSI Electronic Catalogue* or of British Standards Online.

This publication does not purport to include all the necessary provisions of a contract. Users are responsible for its correct application.

Compliance with a British Standard does not of itself confer immunity from legal obligations.

blank

EUROPEAN STANDARD

NORME EUROPÉENNE

EUROPÄISCHE NORM

EN ISO 9445

March 2006

ICS 77.140.20; 77.140.50

Supersedes EN 10258:1997 and EN 10259:1997

English Version

Continuously cold-rolled stainless steel narrow strip, wide strip, plate/sheet and cut lengths - Tolerances on dimensions and form (ISO 9445:2002)

Feuillards, larges bandes, tôles et feuillards coupés à longueur en acier inoxydable laminés à froid en continu - Tolérances sur les dimensions et la forme (ISO 9445:2002)

Kontinuierlich gewalztes Kaltband, Kaltbreitband, Blech und Kaltband in Stäben aus nichtrostenden Stählen - Tolerances on dimensions and form (ISO 9445:2002)

This European Standard was approved by CEN on 6 February 2006.

CEN members are bound to comply with the CEN/CENELEC Internal Regulations which stipulate the conditions for giving this European Standard the status of a national standard without any alteration. Up-to-date lists and bibliographical references concerning such national standards may be obtained on application to the Central Secretariat or to any CEN member.

This European Standard exists in three official versions (English, French, German). A version in any other language made by translation under the responsibility of a CEN member into its own language and notified to the Central Secretariat has the same status as the official versions.

CEN members are the national standards bodies of Austria, Belgium, Cyprus, Czech Republic, Denmark, Estonia, Finland, France, Germany, Greece, Hungary, Iceland, Ireland, Italy, Latvia, Lithuania, Luxembourg, Malta, Netherlands, Norway, Poland, Portugal, Romania, Slovakia, Slovenia, Spain, Sweden, Switzerland and United Kingdom.

EUROPEAN COMMITTEE FOR STANDARDIZATION
COMITÉ EUROPÉEN DE NORMALISATION
EUROPÄISCHES KOMITEE FÜR NORMUNG

Management Centre: rue de Stassart, 36 B-1050 Brussels

Ref. No. EN ISO 9445:2006: E

Foreword

The text of ISO 9445:2002 has been prepared by Technical Committee ISO/TC 17 "Steel" of the International Organization for Standardization (ISO) and has been taken over as EN ISO 9445:2006 by Technical Committee ECISS/TC 23 "Steels for heat treatment, alloy steels and free-cutting steels - Qualities and dimensions", the secretariat of which is held by DIN.

This European Standard shall be given the status of a national standard, either by publication of an identical text or by endorsement, at the latest by September 2006, and conflicting national standards shall be withdrawn at the latest by September 2006.

This document supersedes EN 10258:1997 and EN 10259:1997.

According to the CEN/CENELEC Internal Regulations, the national standards organizations of the following countries are bound to implement this European Standard: Austria, Belgium, Cyprus, Czech Republic, Denmark, Estonia, Finland, France, Germany, Greece, Hungary, Iceland, Ireland, Italy, Latvia, Lithuania, Luxembourg, Malta, Netherlands, Norway, Poland, Portugal, Romania, Slovakia, Slovenia, Spain, Sweden, Switzerland and United Kingdom.

Endorsement notice

The text of ISO 9445:2002 has been approved by CEN as EN ISO 9445:2006 without any modifications.

INTERNATIONAL STANDARD

ISO 9445

Second edition
2002-11-01

Continuously cold-rolled stainless steel narrow strip, wide strip, plate/sheet and cut lengths — Tolerances on dimensions and form

Feuillards, larges bandes, tôles et feuillards coupés à longueur en acier inoxydable laminés à froid en continu — Tolérances sur les dimensions et la forme

Reference number
ISO 9445:2002(E)

Contents

Page

Foreword

ISO (the International Organization for Standardization) is a worldwide federation of national standards bodies (ISO member bodies). The work of preparing International Standards is normally carried out through ISO technical committees. Each member body interested in a subject for which a technical committee has been established has the right to be represented on that committee. International organizations, governmental and non-governmental, in liaison with ISO, also take part in the work. ISO collaborates closely with the International Electrotechnical Commission (IEC) on all matters of electrotechnical standardization.

International Standards are drafted in accordance with the rules given in the ISO/IEC Directives, Part 3.

The main task of technical committees is to prepare International Standards. Draft International Standards adopted by the technical committees are circulated to the member bodies for voting. Publication as an International Standard requires approval by at least 75 % of the member bodies casting a vote.

Attention is drawn to the possibility that some of the elements of this International Standard may be the subject of patent rights. ISO shall not be held responsible for identifying any or all such patent rights.

ISO 9445 was prepared by Technical Committee ISO/TC 17, *Steel*, Subcommittee SC 4, *Heat treatable and alloy steels*.

This second edition cancels and replaces the first edition (ISO 9445:1990) as well as ISO 9447:1990, the contents of which have been combined and technically revised.

Continuously cold-rolled stainless steel narrow strip, wide strip, plate/sheet and cut lengths — Tolerances on dimensions and form

1 Scope

1.1 This International Standard specifies the tolerances on dimensions and form for continuously cold-rolled stainless steel narrow strip, in thicknesses of up to and including 3 mm and in rolling widths of less than 600 mm. It also applies to cut lengths taken from such strip.

1.2 This International Standard also specifies the tolerances on dimensions and form for continuously cold-rolled stainless steel wide strip and plate/sheet, in thicknesses from 0,3 mm to 8,0 mm and in rolling widths from 600 mm to 2 100 mm. It also applies to slit cold-rolled wide strip in widths less than 600 mm manufactured from wide strip by longitudinal slitting and to cut lengths manufactured from such strip.

2 Normative reference

The following normative document contains provisions which, through reference in this text, constitute provisions of this International Standard. For dated references, subsequent amendments to, or revisions of, any of these publications do not apply. However, parties to agreements based on this International Standard are encouraged to investigate the possibility of applying the most recent edition of the normative document indicated below. For undated references, the latest edition of the normative document referred to applies. Members of ISO and IEC maintain registers of currently valid International Standards.

ISO 6929:1987, *Steel products — Definitions and classification*

3 Terms and definitions

For the purposes of this International Standard, the terms and definitions given in ISO 6929 shall apply.

4 Information to be supplied by the purchaser

4.1 It shall be the responsibility of the purchaser to specify all requirements that are necessary for products under this specification. Such requirements to be considered include, in the order listed, but not limited to, the following:

a) the type of delivery [see 5.2 a) to f)];

b) the number of this International Standard, i.e. ISO 9445;

c) the thickness, in millimetres, (if necessary accurate to two decimal places) and, if required, including the relevant code letter (F or P) for a fine or precision tolerance in the case of cold-rolled narrow strip and products obtained from such strip or including the relevant code letter (S) for a special tolerance in the case of cold-rolled wide strip and products obtained from such strip;

d) for cold-rolled wide strip and products cut from it, the measurement of thickness method to be used, either method A in accordance with 17.2.2 and tolerances according to Table 2 with the relevant code letter (A) or method B in accordance with 17.2.3 and tolerances according to Table 3 with the relevant code letter (B);

e) the width, in millimetres, and if required, including the relevant code letter (F or P) for a fine or precision tolerance in the case of cold-rolled narrow strip and products obtained from such strip or including the relevant code letter (S) for a special tolerance in the case of cold-rolled wide strip and products obtained from such strip;

f) for cold-rolled wide strip and products obtained from such strip, the condition of the edges (M = mill edges, T = trimmed edges);

g) for plate/sheet and cut lengths, the length, in millimetres, and if a special tolerance is required, the code letter S;

h) for cold-rolled narrow strip and cut lengths obtained from cold-rolled narrow strip, the code letter R where a restricted tolerance on edge camber is required;

i) for cold-rolled plate/sheet and cut lengths, the code letter FS where a special tolerance is required for flatness.

EXAMPLE 1 Cold-rolled narrow strip according to this International Standard with a specified thickness of 0,25 mm, precision thickness tolerance (P), with a specified width of 250 mm, precision tolerance on width (P), and with restricted tolerance on edge camber (R).

Cold-rolled narrow strip ISO 9445-0,25P × 250P-R

EXAMPLE 2 Cut length obtained from slit cold-rolled wide strip according to this International Standard with a specified thickness of 1,5 mm, special thickness tolerance (S), measuring method A, with a specified width of 200 mm, special tolerance on width (S), with a specified length of 500 mm, special tolerance on length (S) and a special tolerance on flatness (FS).

Cut length from slit cold-rolled wide strip ISO 9445-1,5SA × 200S × 500S-FS

4.2 In the absence of information in the order concerning special requirements for tolerances on dimension and shape [see 4.1 c), e), g), h) and i)], flat products covered by this International Standard shall be delivered according to the basic specifications of this International Standard, i.e. with normal tolerances.

5 Type of delivery and delivery condition

5.1 General

In the absence of agreements at the time of enquiry and order concerning special requirements for the delivery conditions given in 5.3 and 5.4, flat products covered by this International Standard will be delivered according to the basic specifications of this International Standard.

5.2 Type of delivery

Flat products according to this International Standard can be supplied as

a) cold-rolled narrow strip (strip in rolled widths less than 600 mm);

b) cut lengths from cold-rolled narrow strip [cut from cold-rolled narrow strip according to item 5.2 a)];

c) cold-rolled wide strip (strip in rolled widths equal to or greater than 600 mm);

d) cold-rolled plate/sheet [cut from cold-rolled wide strip according to item 5.2 c)];

e) slit, cold-rolled wide strip [manufactured by longitudinal slitting of wide strip according to item 5.2 c)];

f) cut lengths from slit, cold-rolled wide strip [cut from slit, cold-rolled wide strip according to item 5.2 e)].

5.3 Delivery condition of cold-rolled narrow strip and products obtained from cold-rolled narrow strip

5.3.1 Cold-rolled narrow strip and cut lengths obtained from cold-rolled narrow strip are usually supplied with cut edges. These products will have burrs caused by cutting. If there are special requirements for these edges, corresponding agreements shall be made on ordering. In this case, the strip is deemed to be cut almost free of burr if the height of the burr is less than 10 % of the product thickness.

5.3.2 By special agreement and depending on the technical equipment of the supplier, cold-rolled narrow strip and cut lengths obtained from cold-rolled narrow strip can be delivered with special edges, e.g. deburred or rounded edges.

5.4 Delivery condition of cold-rolled wide strip and products obtained from cold-rolled wide strip

Cold-rolled wide strip, plate/sheet cut from cold-rolled wide strip, slit cold-rolled wide strip and cut lengths obtained from slit cold-rolled wide strip are usually supplied with mill or trimmed edges. These products may have burrs.

6 Preferred thicknesses

For cold-rolled wide strip and the products obtained from cold-rolled wide strip [see 5.2 c), d), e) and f)] the following preferred thicknesses exist:

0,30 mm; 0,40 mm; 0,50 mm; 0,60 mm; 0,70 mm; 0,80 mm; 1,00 mm; 1,20 mm; 1,50 mm; 2,00 mm; 2,50 mm; 3,00 mm; 4,00 mm; 5,00 mm; 6,00 mm.

7 Tolerances on thickness

7.1 Tolerances on thickness for cold-rolled narrow strip and products obtained from cold-rolled narrow strip

The tolerances on thickness are given in Table 1.

7.2 Tolerances on thickness for cold-rolled wide strip and products obtained from cold-rolled wide strip

The tolerances on thickness can be taken from Table 2 (see 17.2.2 — method A) or Table 3 (see 17.2.3 — method B).

NOTE The two tables are necessary for recognizing different "customs and practices" in different countries with respect to measurement methods.

Table 1 — Tolerances on specified thickness[a] for cold-rolled narrow strip and cut lengths obtained from cold-rolled narrow strip

Dimensions in millimetres

Specified thickness t	Tolerance on specified thickness for nominal width of								
	$w < 125$			$125 \leqslant w < 250$			$250 \leqslant w < 600$		
	Normal	Fine (F)	Precision (P)	Normal	Fine (F)	Precision (P)	Normal	Fine (F)	Precision (P)
0,05[b] $\leqslant t <$ 0,10	± 0,10 t	± 0,06 t	± 0,04 t	± 0,12 t	± 0,10 t	± 0,08 t	± 0,15 t	± 0,10 t	± 0,08 t
0,10 $\leqslant t <$ 0,15	± 0,010	± 0,008	± 0,006	± 0,015	± 0,012	± 0,008	± 0,020	± 0,015	± 0,010
0,15 $\leqslant t <$ 0,20	± 0,015	± 0,010	± 0,008	± 0,020	± 0,012	± 0,010	± 0,025	± 0,015	± 0,012
0,20 $\leqslant t <$ 0,25	± 0,015	± 0,012	± 0,008	± 0,020	± 0,015	± 0,010	± 0,025	± 0,020	± 0,012
0,25 $\leqslant t <$ 0,30	± 0,017	± 0,012	± 0,009	± 0,025	± 0,015	± 0,012	± 0,030	± 0,020	± 0,015
0,30 $\leqslant t <$ 0,40	± 0,020	± 0,015	± 0,010	± 0,025	± 0,020	± 0,012	± 0,030	± 0,025	± 0,015
0,40 $\leqslant t <$ 0,50	± 0,025	± 0,020	± 0,012	± 0,030	± 0,020	± 0,015	± 0,035	± 0,025	± 0,018
0,50 $\leqslant t <$ 0,60	± 0,030	± 0,020	± 0,014	± 0,030	± 0,025	± 0,015	± 0,040	± 0,030	± 0,020
0,60 $\leqslant t <$ 0,80	± 0,030	± 0,025	± 0,015	± 0,035	± 0,030	± 0,018	± 0,040	± 0,035	± 0,025
0,80 $\leqslant t <$ 1,00	± 0,030	± 0,025	± 0,018	± 0,040	± 0,030	± 0,020	± 0,050	± 0,035	± 0,025
1,00 $\leqslant t <$ 1,20	± 0,035	± 0,030	± 0,020	± 0,045	± 0,035	± 0,025	± 0,050	± 0,040	± 0,030
1,20 $\leqslant t <$ 1,50	± 0,040	± 0,030	± 0,020	± 0,050	± 0,035	± 0,025	± 0,060	± 0,045	± 0,030
1,50 $\leqslant t <$ 2,00	± 0,050	± 0,035	± 0,025	± 0,060	± 0,040	± 0,030	± 0,070	± 0,050	± 0,035
2,00 $\leqslant t <$ 2,50	± 0,050	± 0,035	± 0,025	± 0,070	± 0,045	± 0,030	± 0,080	± 0,060	± 0,040
2,50 $\leqslant t \leqslant$ 3,00	± 0,060	± 0,045	± 0,030	± 0,070	± 0,050	± 0,035	± 0,090	± 0,070	± 0,045

[a] By agreement, the tolerances may alternatively be totally + or totally − or unevenly distributed. In any case, the total range of the tolerance shall remain as in the table.

[b] For thicknesses below 0,05 mm, the values for the tolerances are to be agreed at the time of enquiry and order.

Table 2 — Tolerances on specified thickness for cold-rolled wide strip, plate/sheet cut from cold-rolled wide strip, slit cold-rolled wide strip and cut lengths obtained from slit cold-rolled wide strip

Dimensions in millimetres

Specified thickness	**Normal tolerances** for a specified width of			**Special tolerances** (S) for a specified width of		
t	$w \leqslant 1\,000$	$1\,000 < w \leqslant 1\,300$	$1\,300 < w \leqslant 2\,100$	$w \leqslant 1\,000$	$1\,000 < w \leqslant 1\,300$	$1\,300 < w \leqslant 2\,100$
$t < 0{,}30$	± 0,030	—	—	± 0,020	—	—
$0{,}30 \leqslant t < 0{,}50$	± 0,04	± 0,04	—	± 0,025	± 0,030	—
$0{,}50 \leqslant t < 0{,}60$	± 0,045	± 0,05	—	± 0,030	± 0,035	—
$0{,}60 \leqslant t < 0{,}80$	± 0,05	± 0,05	—	± 0,035	± 0,040	—
$0{,}80 \leqslant t < 1{,}00$	± 0,055	± 0,06	± 0,06	± 0,040	± 0,045	± 0,050
$1{,}00 \leqslant t < 1{,}20$	± 0,06	± 0,07	± 0,07	± 0,045	± 0,045	± 0,050
$1{,}20 \leqslant t < 1{,}50$	± 0,07	± 0,08	± 0,08	± 0,050	± 0,055	± 0,060
$1{,}50 \leqslant t < 2{,}00$	± 0,08	± 0,09	± 0,10	± 0,055	± 0,060	± 0,070
$2{,}00 \leqslant t < 2{,}50$	± 0,09	± 0,10	± 0,11	—	—	—
$2{,}50 \leqslant t < 3{,}00$	± 0,11	± 0,12	± 0,12	—	—	—
$3{,}00 \leqslant t < 4{,}00$	± 0,13	± 0,14	± 0,14	—	—	—
$4{,}00 \leqslant t < 5{,}00$	± 0,14	± 0,15	± 0,15	—	—	—
$5{,}00 \leqslant t < 6{,}50$	± 0,15	± 0,15	± 0,16	—	—	—
$6{,}50 \leqslant t \leqslant 8{,}00$	± 0,16	± 0,17	± 0,17	—	—	—

NOTE The tolerances are measured in accordance with 17.2.2 — method A.

Table 3 — Tolerances on specified thickness for cold-rolled wide strip, plate/sheet cut from cold-rolled wide strip, slit cold-rolled wide strip and cut lengths obtained from slit cold-rolled wide strip

Dimensions in millimetres

Specified thickness	Normal tolerances for a specified width of			Special tolerances (S) for a specified width of		
t	$w \leqslant 1\,000$	$1\,000 < w \leqslant 1\,300$	$1\,300 < w \leqslant 2\,100$	$w \leqslant 1\,000$	$1\,000 < w \leqslant 1\,300$	$1\,300 < w \leqslant 2\,100$
$t < 0{,}30$	± 0,030	—	—	± 0,030	—	—
$0{,}30 \leqslant t < 0{,}40$	± 0,04	± 0,04	—	± 0,030	± 0,035	—
$0{,}40 \leqslant t < 0{,}50$	± 0,04	± 0,04	—	± 0,035	± 0,035	—
$0{,}50 \leqslant t < 0{,}60$	± 0,045	± 0,05	—	± 0,035	± 0,035	—
$0{,}60 \leqslant t < 0{,}80$	± 0,05	± 0,05	—	± 0,040	± 0,040	—
$0{,}80 \leqslant t < 1{,}00$	± 0,055	± 0,06	± 0,07	± 0,040	± 0,050	± 0,050
$1{,}00 \leqslant t < 1{,}20$	± 0,06	± 0,07	± 0,08	± 0,050	± 0,055	± 0,060
$1{,}20 \leqslant t < 1{,}50$	± 0,08	± 0,08	± 0,10	± 0,055	± 0,060	± 0,060
$1{,}50 \leqslant t < 2{,}00$	± 0,08	± 0,09	± 0,11	± 0,065	± 0,070	± 0,080
$2{,}00 \leqslant t < 2{,}50$	± 0,09	± 0,11	± 0,13	—	—	—
$2{,}50 \leqslant t < 3{,}00$	± 0,11	± 0,13	± 0,15	—	—	—
$3{,}00 \leqslant t < 4{,}00$	± 0,14	± 0,15	± 0,16	—	—	—
$4{,}00 \leqslant t < 5{,}00$	± 0,15	± 0,17	± 0,19	—	—	—
$5{,}00 \leqslant t < 6{,}00$	± 0,17	± 0,20	± 0,23	—	—	—
$6{,}00 \leqslant t \leqslant 8{,}00$	± 0,17	± 0,22	± 0,25	—	—	—

NOTE The tolerances are measured in accordance with 17.2.3 — method B.

8 Tolerances on width

8.1 Tolerances on width for cold-rolled narrow strip and products obtained from cold-rolled narrow strip

The tolerances on width are given in Table 4.

Table 4 — Tolerances on width[a] for cold-rolled narrow strip and cut lengths obtained from cold-rolled narrow strip

Dimensions in millimetres

Specified thickness t	Specified width w											
	$w \leqslant 40$			$40 < w \leqslant 125$			$125 < w \leqslant 250$			$250 < w \leqslant 600$		
	Normal	Fine (F)	Precision (P)	Normal	Fine (F)	Precision (P)	Normal	Fine (F)	Precision (P)	Normal	Fine (F)	Precision (P)
$t < 0{,}25$	$^{+0{,}17}_{0}$	$^{+0{,}13}_{0}$	$^{+0{,}10}_{0}$	$^{+0{,}20}_{0}$	$^{+0{,}15}_{0}$	$^{+0{,}12}_{0}$	$^{+0{,}25}_{0}$	$^{+0{,}20}_{0}$	$^{+0{,}15}_{0}$	$^{+0{,}50}_{0}$	$^{+0{,}50}_{0}$	$^{+0{,}40}_{0}$
$0{,}25 \leqslant t < 0{,}50$	$^{+0{,}20}_{0}$	$^{+0{,}15}_{0}$	$^{+0{,}12}_{0}$	$^{+0{,}25}_{0}$	$^{+0{,}20}_{0}$	$^{+0{,}15}_{0}$	$^{+0{,}30}_{0}$	$^{+0{,}22}_{0}$	$^{+0{,}17}_{0}$	$^{+0{,}60}_{0}$	$^{+0{,}50}_{0}$	$^{+0{,}40}_{0}$
$0{,}50 \leqslant t < 1{,}00$	$^{+0{,}25}_{0}$	$^{+0{,}22}_{0}$	$^{+0{,}15}_{0}$	$^{+0{,}25}_{0}$	$^{+0{,}22}_{0}$	$^{+0{,}17}_{0}$	$^{+0{,}40}_{0}$	$^{+0{,}25}_{0}$	$^{+0{,}20}_{0}$	$^{+0{,}70}_{0}$	$^{+0{,}60}_{0}$	$^{+0{,}50}_{0}$
$1{,}00 \leqslant t < 1{,}50$	$^{+0{,}25}_{0}$	$^{+0{,}22}_{0}$	$^{+0{,}15}_{0}$	$^{+0{,}30}_{0}$	$^{+0{,}25}_{0}$	$^{+0{,}17}_{0}$	$^{+0{,}50}_{0}$	$^{+0{,}30}_{0}$	$^{+0{,}22}_{0}$	$^{+1{,}0}_{0}$	$^{+0{,}70}_{0}$	$^{+0{,}60}_{0}$
$1{,}50 \leqslant t < 2{,}50$	—	—	—	$^{+0{,}40}_{0}$	$^{+0{,}25}_{0}$	$^{+0{,}20}_{0}$	$^{+0{,}60}_{0}$	$^{+0{,}40}_{0}$	$^{+0{,}25}_{0}$	$^{+1{,}0}_{0}$	$^{+0{,}80}_{0}$	$^{+0{,}60}_{0}$
$2{,}50 \leqslant t \leqslant 3{,}00$	—	—	—	$^{+0{,}50}_{0}$	$^{+0{,}30}_{0}$	$^{+0{,}25}_{0}$	$^{+0{,}60}_{0}$	$^{+0{,}40}_{0}$	$^{+0{,}25}_{0}$	$^{+1{,}2}_{0}$	$^{+1{,}0}_{0}$	$^{+0{,}80}_{0}$

[a] By agreement, the tolerance may alternatively be either equally ± or all –. In both cases, the total range of the tolerance shall remain as in Table 4.

8.2 Tolerances on width for cold-rolled wide strip and products obtained from cold-rolled wide strip

The tolerances on width are given in Table 5 (mill edges) and Table 6 (trimmed edges).

Table 5 — Tolerances on width for cold-rolled wide strip and sheet/plate cut from cold-rolled wide strip with mill edges

Dimensions in millimetres

Tolerances for a specified width of		
$600 \leqslant w < 1\,000$	$1\,000 \leqslant w < 1\,500$	$1\,500 \leqslant w$
$^{+25}_{0}$	$^{+30}_{0}$	

Table 6 — Tolerances on width for cold-rolled wide strip, plate/sheet cut from cold-rolled wide strip, slit cold-rolled wide strip and cut lengths obtained from slit cold-rolled wide strip with trimmed edges

Dimensions in millimetres

Specified thickness	Normal tolerances[a] for a specified width of					Special tolerances[a] (S) for a specified width of		
t	$w \leqslant 125$[b]	$125 < w \leqslant 250$[b]	$250 < w \leqslant 600$[b]	$600 < w \leqslant 1\,000$[b]	$1\,000 < w \leqslant 2\,100$[b]	$w \leqslant 125$	$125 < w \leqslant 250$	$250 < w \leqslant 600$
$t < 1{,}00$	$^{+0{,}5}_{0}$	$^{+0{,}5}_{0}$	$^{+0{,}7}_{0}$	$^{+1{,}5}_{0}$	$^{+2{,}0}_{0}$	$^{+0{,}3}_{0}$	$^{+0{,}3}_{0}$	$^{+0{,}6}_{0}$
$1{,}00 \leqslant t < 1{,}50$	$^{+0{,}7}_{0}$	$^{+0{,}7}_{0}$	$^{+1{,}0}_{0}$	$^{+1{,}5}_{0}$	$^{+2{,}0}_{0}$	$^{+0{,}4}_{0}$	$^{+0{,}5}_{0}$	$^{+0{,}7}_{0}$
$1{,}50 \leqslant t < 2{,}50$	$^{+1{,}0}_{0}$	$^{+1{,}0}_{0}$	$^{+1{,}2}_{0}$	$^{+2{,}0}_{0}$	$^{+2{,}5}_{0}$	$^{+0{,}6}_{0}$	$^{+0{,}7}_{0}$	$^{+0{,}9}_{0}$
$2{,}50 \leqslant t < 3{,}50$	$^{+1{,}2}_{0}$	$^{+1{,}2}_{0}$	$^{+1{,}5}_{0}$	$^{+3{,}0}_{0}$	$^{+3{,}0}_{0}$	$^{+0{,}8}_{0}$	$^{+0{,}9}_{0}$	$^{+1{,}0}_{0}$
$3{,}50 \leqslant t \leqslant 8{,}00$	$^{+2{,}0}_{0}$	$^{+2{,}0}_{0}$	$^{+2{,}0}_{0}$	$^{+4{,}0}_{0}$	$^{+4{,}0}_{0}$	—	—	—

[a] By special agreement, products can be supplied with permissible undersizes on the specified width. In this case, the values in Table 6 apply as the oversize plus undersize range.

[b] For material with edges re-cut by shearing, the tolerances on width may, by agreement, be increased to 5 mm.

9 Preferred coil inner diameters for cold-rolled products

9.1 Preferred coil inner diameters for cold-rolled narrow strip

The inside diameter of the coil shall be decided by mutual agreement. Preferred inside diameters of coils are approximately 300 mm, 400 mm, 500 mm and 600 mm with a limitation for the diameter 300 mm which is not available for strip thicknesses above 2,0 mm.

9.2 Preferred coil inner diameters for cold-rolled wide strip and slit cold-rolled wide strip

The inside diameter of the coil shall be decided by mutual agreement. Preferred inside diameters of coils are approximately 500 mm and approximately 600 mm; in the case of slit cold-rolled wide strip, approximately 400 mm may also be available.

10 Tolerances on length

10.1 Tolerances on length for cut lengths obtained from cold-rolled narrow strip

The tolerances on length are given in Table 7.

Table 7 — Length tolerances for cut lengths obtained from cold-rolled narrow strip

Dimensions in millimetres

Specified length l	Tolerances	
	Normal	Special (S)
$l \leqslant 2\,000$	$^{+3}_{0}$	$^{+1{,}5}_{0}$
$2\,000 < l \leqslant 4\,000$	$^{+5}_{0}$	$^{+2}_{0}$

10.2 Tolerances on length for plate/sheet cut from cold-rolled wide strip and for cut lengths obtained from slit cold-rolled wide strip

The tolerances on length are given in Table 8.

Table 8 — Length tolerances for plate/sheet cut from cold-rolled wide strip and for cut lengths obtained from slit cold-rolled wide strip

Dimensions in millimetres

Specified length l	Tolerances	
	Normal	Special (S)
$l \leqslant 2\,000$	$^{+5}_{0}$	$^{+3}_{0}$
$2\,000 < l$	$^{+0{,}002\,5 \times l}_{0}$	$^{+0{,}001\,5 \times l}_{0}$

11 Tolerances on edge camber

11.1 Edge camber tolerances for cold-rolled narrow strip and cut lengths obtained from cold-rolled narrow strip

The edge camber tolerances are given in Table 9. These tolerances do not apply to material supplied in the work-hardened condition, for which any requirement shall be agreed between manufacturer and purchaser.

Table 9 — Tolerances on edge camber for cold-rolled narrow strip and cut lengths obtained from cold rolled narrow strip

Dimensions in millimetres

Specified width w	Edge camber tolerances[a] for measuring lengths			
	1 000	2 000	1 000	2 000
	Normal		Restricted (R)	
$10 \leqslant w < 25$	4	16	1,5	6
$25 \leqslant w < 40$	3	12	1,25	5
$40 \leqslant w < 125$	2	8	1,0	4
$125 \leqslant w < 600$	1,5	6	0,75	3

[a] If applicable, both measuring lengths shall be used.

11.2 Edge camber tolerances for cold-rolled wide strip and products obtained from cold-rolled wide strip

The edge camber tolerances are given in Table 10. These tolerances do not apply to material supplied in the work-hardened condition, for which any requirement shall be agreed between manufacturer and purchaser.

NOTE This requirement can be verified on plate/sheet and cut lengths only. However, products cut from strip should also fulfil this requirement.

Table 10 — Tolerances on edge camber for cold-rolled wide strip, plate/sheet cut from cold-rolled wide strip, slit cold-rolled wide strip and cut lengths obtained from slit cold-rolled wide strip

Dimensions in millimetres

Specified width w	**Edge camber tolerances**[a] for measuring lengths	
	1 000	2 000
$10 \leqslant w < 40$	2,5	10
$40 \leqslant w < 125$	2	8
$125 \leqslant w < 600$	1,5	6
$600 \leqslant w \leqslant 2\,100$	1	4

[a] If applicable, both measuring lengths shall be used.

12 Tolerances on squareness

12.1 Tolerances on squareness for cut lengths obtained from cold-rolled narrow strip

The out-of-squareness for cut lengths obtained from cold-rolled narrow strip in widths of 250 mm and above shall not exceed 0,5 % of the actual width of the product.

For cut lengths obtained from cold-rolled narrow strip in widths less than 250 mm, the value shall be agreed at the time of enquiry and order.

12.2 Tolerances on squareness for plate/sheet obtained from cold-rolled wide strip and cut lengths obtained from slit cold-rolled wide strip

The out-of-squareness for plate/sheet obtained from cold-rolled wide strip and cut lengths obtained from slit cold-rolled wide strip shall not exceed 0,5 % of the width of the product, or alternatively shall not exceed the values listed in Table 11.

Table 11 — Tolerances on squareness for plate/sheet obtained from cold-rolled wide strip and cut lengths obtained from slit cold-rolled wide strip, in terms of the difference between the diagonal lengths of the product

Dimensions in millimetres

Length l	**Maximum difference** in diagonal lengths
$l \leqslant 3\,000$	6
$3\,000 < l \leqslant 6\,000$	10
$l > 6\,000$	15

13 Tolerances on flatness

13.1 Tolerances on flatness for cut lengths obtained from cold-rolled narrow strip

The flatness tolerance for cut lengths obtained from cold-rolled narrow strip shall not exceed 10 mm for normal cases and 7 mm where a special tolerance (FS) is required.

This requirement does not apply to material supplied in the work-hardened condition and in condition 2D (cold-rolled, heat-treated, pickled).

13.2 Tolerances on flatness for plate/sheet obtained from cold-rolled wide strip and cut lengths obtained from slit cold-rolled wide strip

The flatness tolerances for plate/sheet obtained from cold-rolled wide strip and cut lengths obtained from slit cold-rolled wide strip shall not exceed 10 mm for normal cases and 7 mm where a special tolerance (FS) is required for lengths up to and including 3 000 mm, and 12 mm for normal cases and 8 mm where a special tolerance (FS) is required for lengths greater than 3 000 mm.

This requirement does not apply to material supplied in the work-hardened condition and in condition 2D (cold-rolled, heat-treated, pickled).

14 Edge waviness tolerances for cold-rolled strip

14.1 For skin-passed or stretch-levelled cold-rolled narrow strip, the waviness of the edges, i.e. the ratio of wave height (h) to wave length (l) shall be a maximum of 0,03 for specified thicknesses up to 1,00 mm and a maximum of 0,02 for specified thicknesses over 1,00 mm (see Figure 1).

This requirement does not apply to material supplied in the work-hardened condition and in condition 2D (cold-rolled, heat-treated, pickled).

14.2 For cold-rolled wide strip or slit cold-rolled wide strip, the waviness of the edges, i.e. the ratio of wave height (h) to wave length (l) shall be a maximum of 0,03 for all thicknesses (see Figure 1).

This requirement does not apply to material supplied in the work-hardened condition and in condition 2D (cold-rolled, heat-treated, pickled).

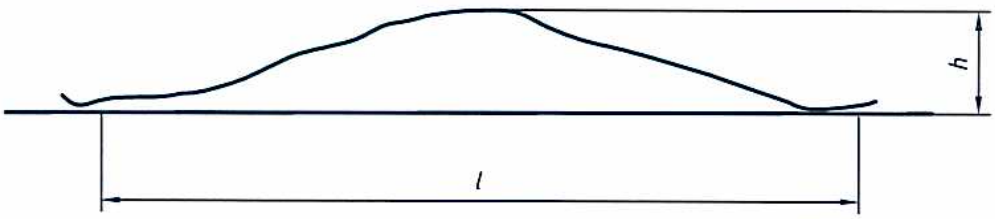

h/l = waviness

Figure 1 — Edge waviness tolerances for cold-rolled strip

15 Form of coils

The coils delivered in accordance with this International Standard shall be tightly wound, as round as possible and with straight edges. Gradual displacement of the edge of the strip to one side shall not exceed 35 mm in the case of trimmed (slit) edges and 70 mm in the case of mill (as rolled) edges.

16 Ordered format for plate/sheet and cut lengths

When ordering, an agreement may be made that the ordered format be contained in every piece supplied. In this case, the tolerances on width, length, edge camber and out-of-square shall be agreed at the time of enquiry and order.

17 Measurement of thickness

17.1 Measurement of thickness for cold-rolled narrow strip and cut lengths obtained from cold-rolled narrow strip

The thickness may be measured at any arbitrarily chosen point on the product at least 10 mm from the edges. For widths up to and including 20 mm, it shall be measured at the centre of the product width.

When ordering fine (F) or precision (P) thickness tolerances, it can be agreed that the permissible deviations from thickness shall be maintained over the whole width of the product.

17.2 Measurement of thickness for cold-rolled wide strip, plate/sheet cut from cold-rolled wide strip, slit cold-rolled wide strip and cut lengths obtained from slit cold-rolled wide strip

17.2.1 The two methods given in 17.2.2 (method A) and 17.2.3 (method B) are alternatives, for use with Tables 2 and 3 respectively.

17.2.2 Method A: The thickness is measured at any point located more than 20 mm from the edges in the case of slit edges and at any point located more than 30 mm from the edges in the case of mill edges, if the tolerances according to Table 2 are chosen.

17.2.3 Method B: The thickness is measured at any point located more than 15 mm from the edges in the case of slit edges and at any point located more than 25 mm from the edges in the case of mill edges, if the tolerances according to Table 3 are chosen.

17.2.4 In the case of slit cold-rolled wide strip and cut lengths having a width of 30 mm or below, the position of measurement shall be at the middle axis.

18 Measurement of width

The width is measured perpendicularly to the rolling direction of the product.

19 Measurement of length

The length of plate/sheet or cut lengths is measured along the rolling direction of the product.

20 Measurement of edge camber

20.1 Edge camber is the greatest deviation of a side edge from a straight line, the measurement being taken on the concave side with a straightedge (see Figure 2).

20.2 Edge camber is not normally measured by the manufacturer, unless compliance is in doubt. If edge camber is measured, this shall be done at a minimum distance of 3 laps from the end of the coil for cold-rolled narrow strip.

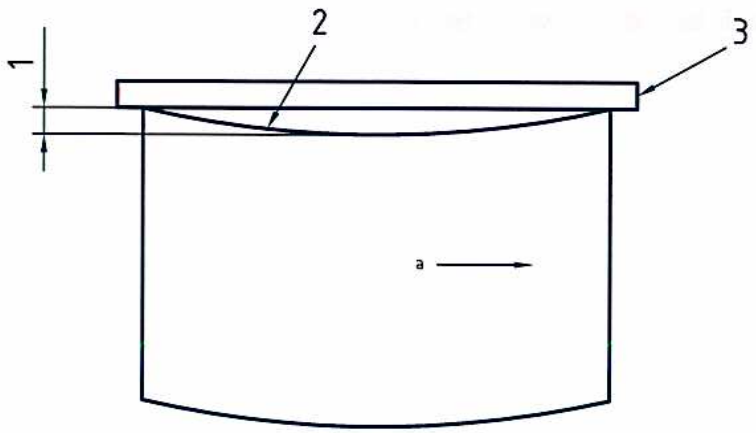

Key

1 Edge camber
2 Side edge (concave side)
3 Straightedge
a Rolling direction

Figure 2 — Measurement of edge camber

21 Measurement of squareness

21.1 Out-of-square is the greatest deviation of an end edge from a straight edge of a square placed at right angles to a side and touching one corner (see Figure 3).

21.2 For sheet obtained from cold-rolled wide strip and cut lengths obtained from slit cold-rolled wide strip, the out-of-squareness may alternatively be measured by taking the difference between the diagonal lengths.

21.3 The out-of-squareness is not normally measured by the manufacturer, unless compliance is in doubt.

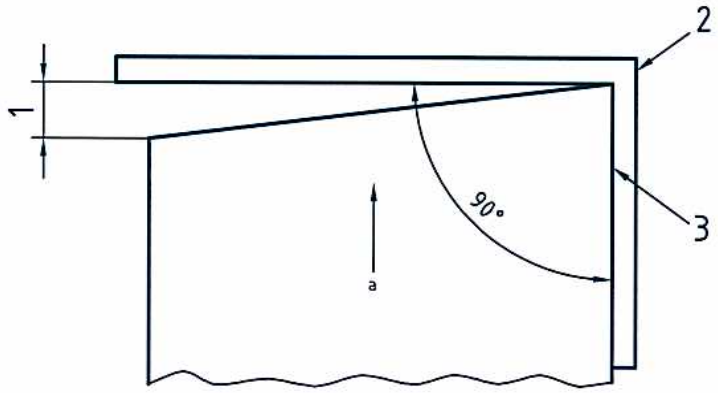

Key

1 Out-of-square
2 Square
3 Side edge
a Rolling direction

Figure 3 — Measurement of out-of-squareness

22 Measurement of flatness and waviness

22.1 Flatness tolerances can be measured in the following ways.

a) For maximum deviation from a flat horizontal surface, with the product lying under its own mass on a flat surface, the maximum deviation from flatness is the maximum distance between the lower surface of the product and the flat horizontal surface.

b) To measure the flatness, the product shall be laid on an approximately flat surface. Deviation with respect to flatness shall be taken as the greatest distance between the product and a straight-edge placed upon it. The straight-edge should be either 1 000 mm or 2 000 mm long. It may be placed on the product at any position and in any direction. Only the position of the points of contact of product and straight-edge shall be taken into account.

Unless otherwise agreed, the choice of measurement method is left to the manufacturer.

22.2 The measurement of waviness is only made on edges.

22.3 Flatness and waviness are not normally measured by the manufacturer, unless compliance is in doubt.

blank

BSI — British Standards Institution

BSI is the independent national body responsible for preparing British Standards. It presents the UK view on standards in Europe and at the international level. It is incorporated by Royal Charter.

Revisions

British Standards are updated by amendment or revision. Users of British Standards should make sure that they possess the latest amendments or editions.

It is the constant aim of BSI to improve the quality of our products and services. We would be grateful if anyone finding an inaccuracy or ambiguity while using this British Standard would inform the Secretary of the technical committee responsible, the identity of which can be found on the inside front cover. Tel: +44 (0)20 8996 9000. Fax: +44 (0)20 8996 7400.

BSI offers members an individual updating service called PLUS which ensures that subscribers automatically receive the latest editions of standards.

Buying standards

Orders for all BSI, international and foreign standards publications should be addressed to Customer Services. Tel: +44 (0)20 8996 9001. Fax: +44 (0)20 8996 7001. Email: orders@bsi-global.com. Standards are also available from the BSI website at http://www.bsi-global.com.

In response to orders for international standards, it is BSI policy to supply the BSI implementation of those that have been published as British Standards, unless otherwise requested.

Information on standards

BSI provides a wide range of information on national, European and international standards through its Library and its Technical Help to Exporters Service. Various BSI electronic information services are also available which give details on all its products and services. Contact the Information Centre. Tel: +44 (0)20 8996 7111. Fax: +44 (0)20 8996 7048. Email: info@bsi-global.com.

Subscribing members of BSI are kept up to date with standards developments and receive substantial discounts on the purchase price of standards. For details of these and other benefits contact Membership Administration. Tel: +44 (0)20 8996 7002. Fax: +44 (0)20 8996 7001. Email: membership@bsi-global.com.

Information regarding online access to British Standards via British Standards Online can be found at http://www.bsi-global.com/bsonline.

Further information about BSI is available on the BSI website at http://www.bsi-global.com.

Copyright

BSI
389 Chiswick High Road
London
W4 4AL